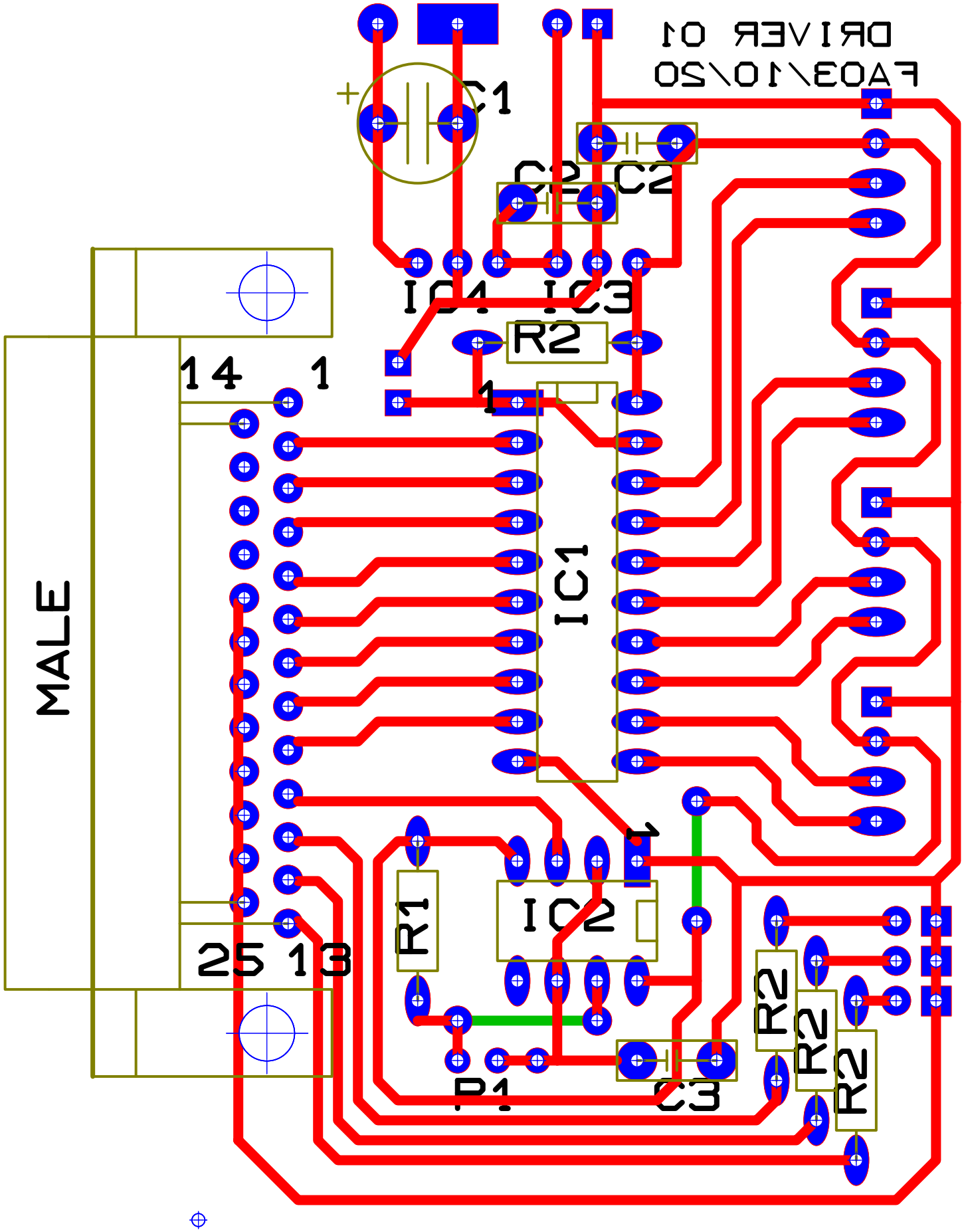
DRIVER 01
FA03\10\20
C1
C2
C2
IC4
IC3
R2
1
IC1
MALE
14
1
25
13
R1
IC2
1
P1
C3
R2
R2
R2